Thresholds

Rehau Total70C Chamfered (bevelled) 70mm system

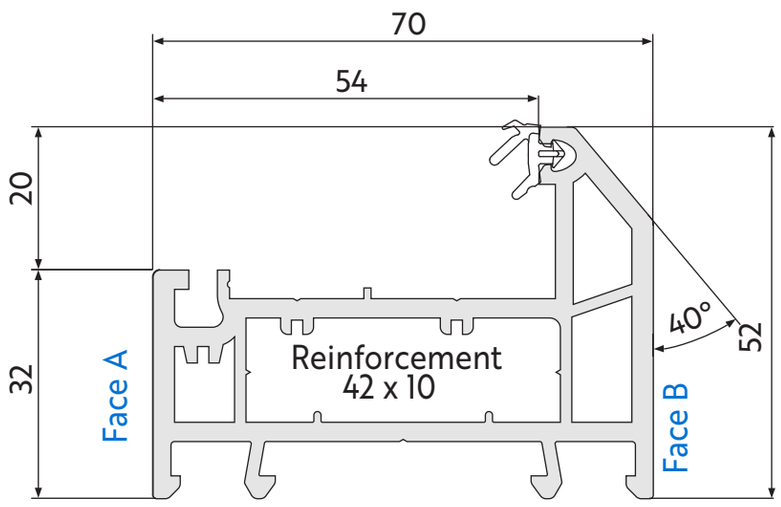

546075
Casement: Slim chamfered (bevelled) uPVC
Outer frame: 52mm

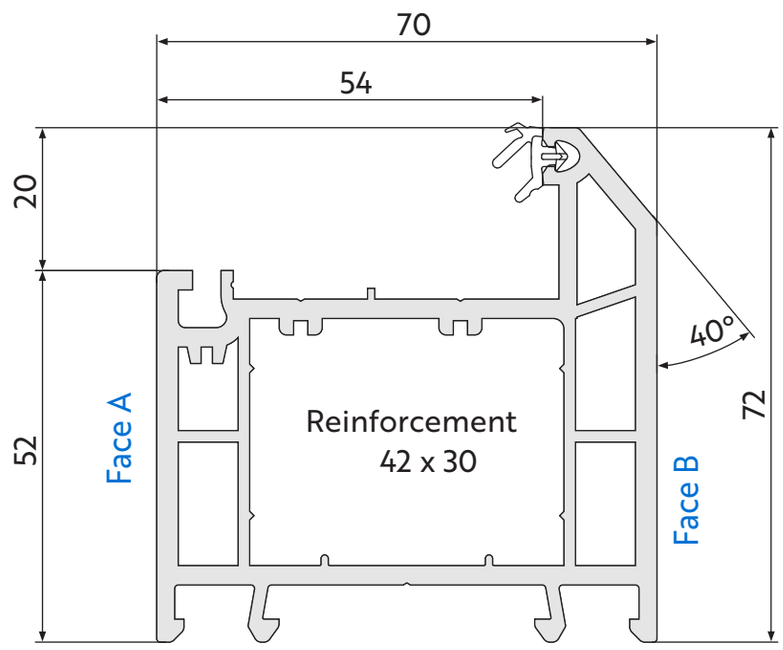

546185
Casement: Large chamfered (bevelled) uPVC
Outer frame: 72mm

Rehau Total70S Sculptured 70mm system

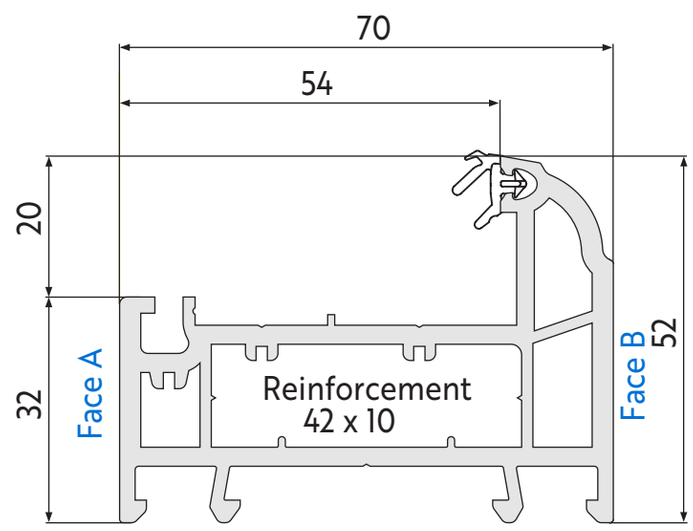

546645
Casement: Slim sculptured uPVC
Outer frame: 52mm

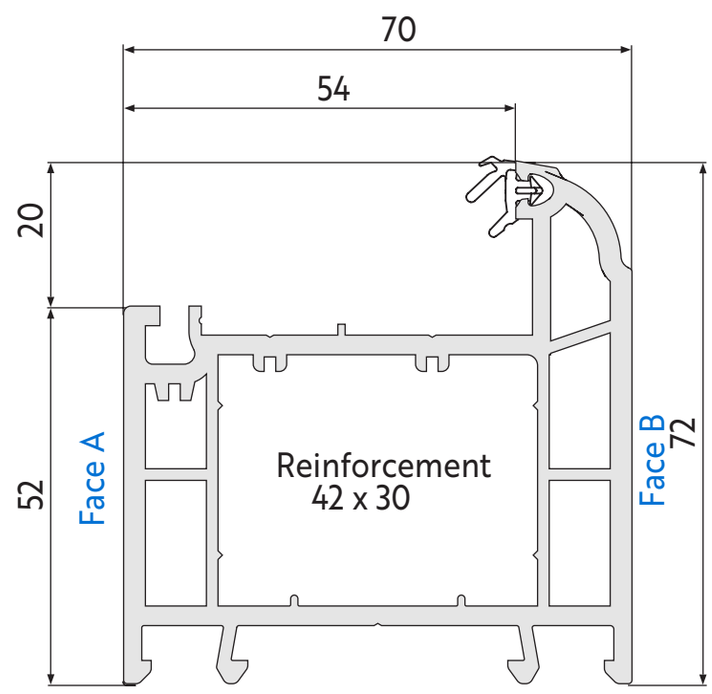

546655
Casement: Large sculptured uPVC
Outer frame: 72mm

Aluminium low thresholds for composite doors

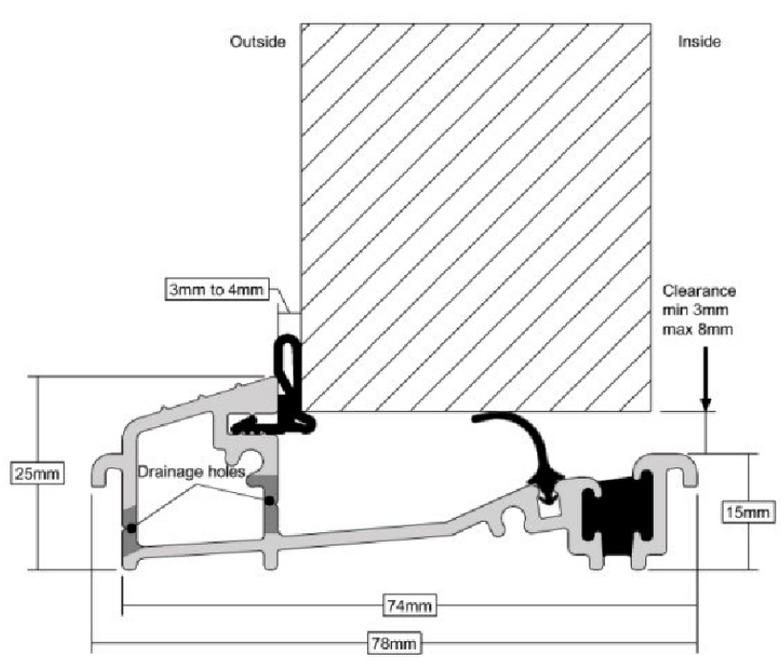

Low aluminium threshold
Open in

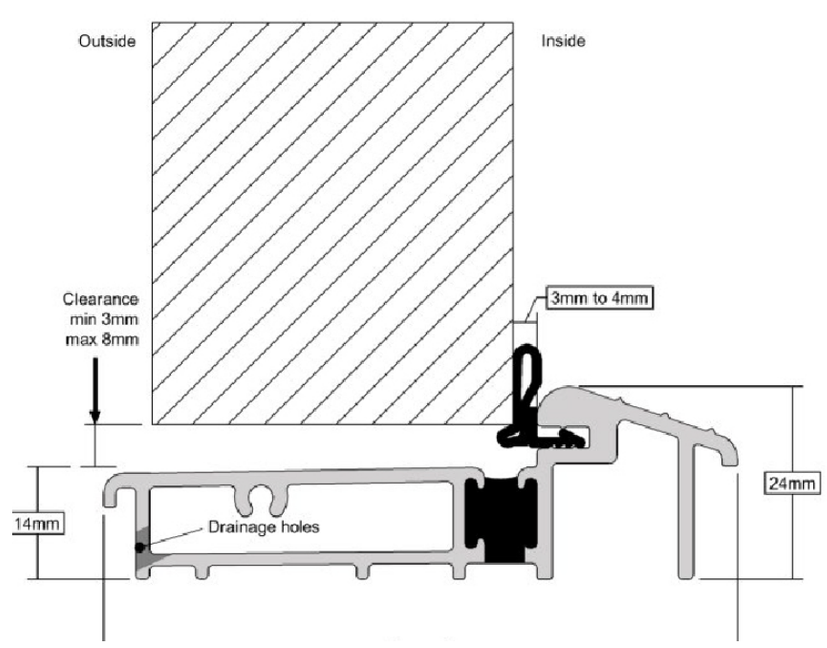

Low aluminium threshold
Open out